RELIEF VALVES

SPECIFICATIONS

Fluid viscosity:	ISO 3448
Filtration:	ISO 4406
Fluid temperature:	-20ºC + 90ºC
Ambient temperature:	-20ºC + 50ºC
Max. operating pressure:	350 Bar
Standard seals:	NBR
Manifold material:	Zinc plated steel

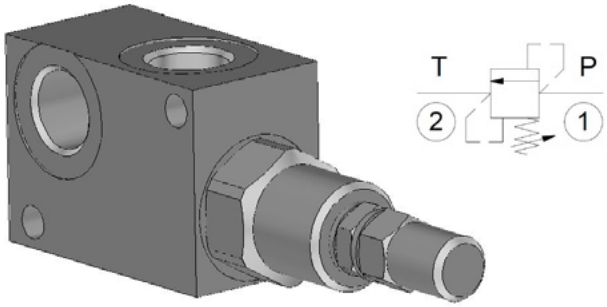

DIMENSIONS (mm)

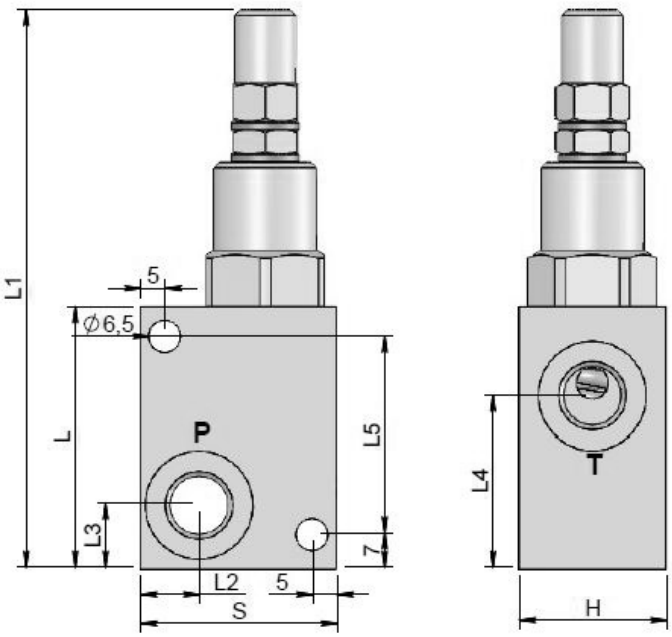

PERFORMANCE

Oil viscosity 24 mm³/s (3,5 ºE) - Temperature 50ºC

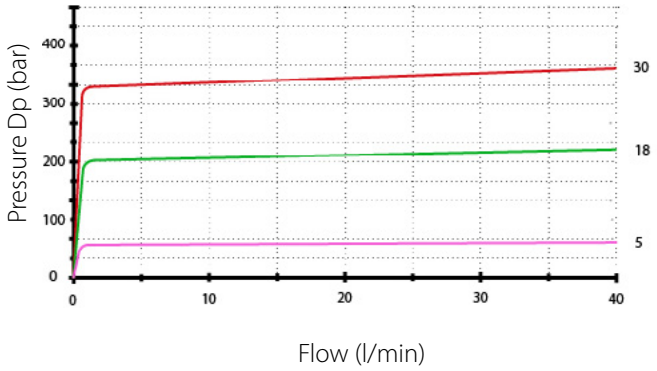

Std setting at **5 l/min**

30 = 10 - 50 bar	30 bar
18 = 10 - 180 bar	90 bar
5 = 80 - 300 bar (Std)	150 bar

Standard code	Thread	L	L1	L2	L3	L4	L5	H	S	Weight (kg)	Q max (l/min)
K-DRLV-45	3/8	55	117	12	15	35.5	43	30	40	0.45	40